Published: 11-May-2011

Front Drive Axle / Differential -

Sealers

Item	Land Rover Part No.
Input shaft flange nut	STC 50553
Input shaft splines	STC 50554

Lubricants

Item	Specification
* Recommended lubricant	Castrol SAF-XO - 75W/90

*** Do not use any lubricant other than that specified**

Capacities

Item	Capacity
Front differential	0.61 litres (1.07 pints) (0.64 US quarts)

Axle Tube

Item	Specification
Axle tube seal (Used on later models. Earlier models used an o-ring)	Land Rover Part No: STC 50550

Front Differential

Item	Specification
Reduction ratio:	
V6 Diesel engine - Manual transmission	3.07:1
V6 Diesel engine - Automatic transmission	3.54:1
V6 Petrol engine - Automatic transmission	3.73:1
V8 Petrol engine - Automatic transmission	3.54:1

Torque Specifications

Description	Nm	lb-ft
Oil drain plug	54	40
Oil filler plug	34	25
Differential locking module bolts	10	7
Parking aid module nuts	10	7
Differential case bolts:		
M14 Front bolt	105	77
*Axle carrier to differential bolts - Stage 1	80	59
*Axle carrier to differential bolts - Stage 2	Further 60°	Further 60°
Front axle crossmember bolts	115	85
**** Driveshaft to front axle drive flange Torx bolts**		
Stage 1	45	33
Stage 2	Further 90°	Further 90°
Road wheel nuts	140	103

*** New bolts must be fitted**

**** New 'Patchlok' Torx bolts must be fitted**

mcx30.com

Published: 11-May-2011

Front Drive Axle / Differential - Front Drive Axle and Differential

Description and Operation

GENERAL

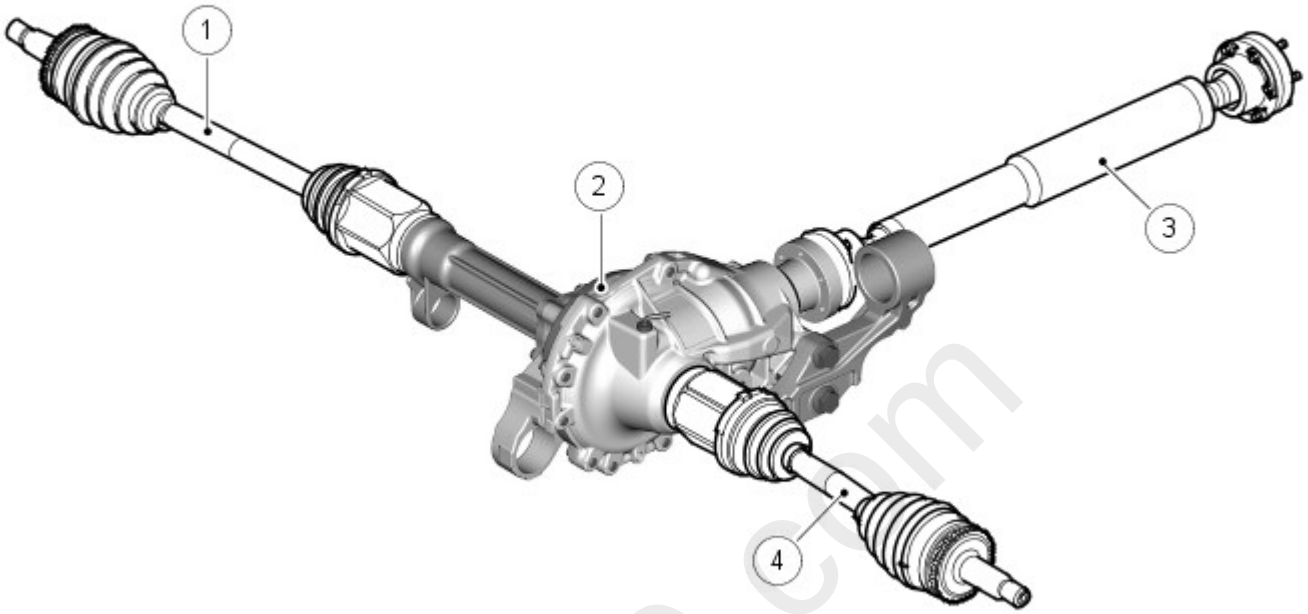

E50981

Item	Part Number	Description
1	-	RH front drive halfshaft
2	-	Front differential assembly
3	-	Front driveshaft
4	-	LH front drive halfshaft

The front differential converts the 'angle of drive' through 90° and distributes drive, via the front drive halfshafts, to the front wheels.

The front differential for the V6 and V8 petrol variants have the same output ratio, but the output ratios for the TdV6 are different, depending on whether automatic or manual transmission is fitted.

The front differential is mounted on the LH side of the chassis.

FRONT DIFFERENTIAL ASSEMBLY

Front Differential - Exploded View

mcx30.com

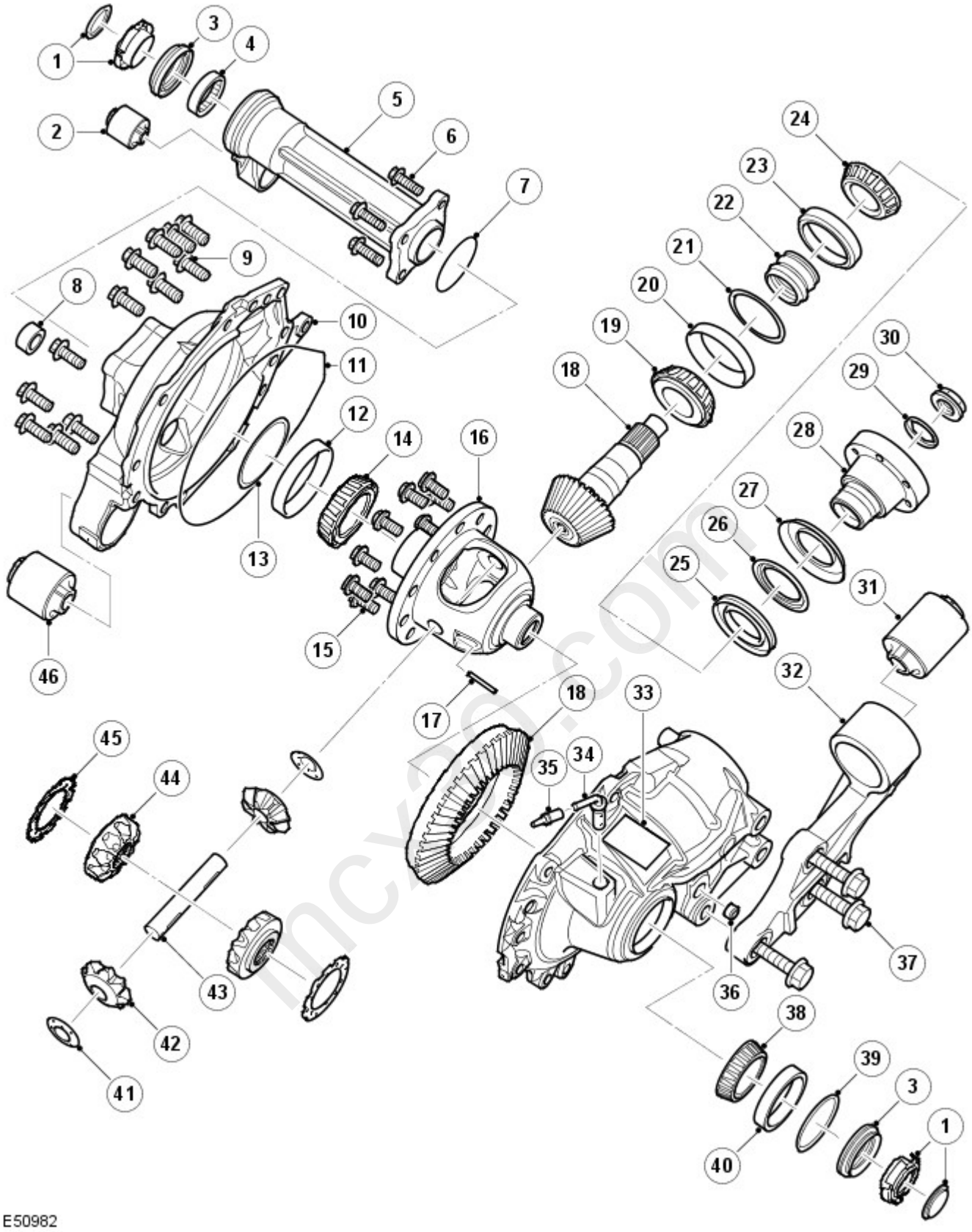

Item	Part Number	Description
1	-	Protection cap
2	-	Mounting bush assembly
3	-	Seal
4	-	Bearing assembly
5	-	Front tube
6	-	Bolt, 4 of
7	-	O-ring
8	-	Drain plug
9	-	Bolt, 14 of
10	-	Cover assembly
11	-	Cover seal

12	-	Roller bearing cup
13	-	Bearing preload spacer
14	-	Taper roller bearing
15	-	Bolt, 10 of
16	-	Differential case
17	-	Roll pin
18	-	Gear and pinion assembly
19	-	Taper roller bearing
20	-	Roller bearing cup
21	-	Shim
22	-	Collapsible spacer
23	-	Roller bearing cup
24	-	Taper roller bearing
25	-	Oil seal
26	-	Inner deflector
27	-	Outer deflector
28	-	Flange
29	-	Pinion nut retainer
30	-	Pinion nut
31	-	Mounting bush assembly
32	-	Axle mounting bracket
33	-	Data label
34	-	Breather tube
35	-	Cap
36	-	Fill plug
37	-	Bolt, 3 of
38	-	Taper roller bearing
39	-	Bearing preload spacer
40	-	Roller bearing cup
41	-	Thrust washer
42	-	Planet gear
43	-	Shaft
44	-	Sunwheel
45	-	Thrust washer
46	-	Mounting bush assembly

The casing comprises two halves with machined mating faces. When assembled, the cast iron casing halves are sealed with a thin film of Loctite 5999 sealant and secured together with fourteen bolts. A breather tube is fitted to the casings. This allows a plastic tube to be fitted and routed to a high point in the engine compartment, preventing the ingress of water when the vehicle is wading.

The RH casing is fitted with a drain plug. The front differential unit contains approximately 0.7 litre of oil for a dry fill.

The differential is a conventional design using a hypoid gear layout. This employs a hypoid bevel pinion gear and crown wheel, with the pinion offset above the centre line of the crown wheel. This design allows for a larger pinion gear to be used, which has the advantages of increased gear strength and reduced operating noise.

The front differential is available in three ratios. V8 and V6 petrol engine vehicles use a front differential with a final drive ratio of 3.73:1 and TdV6 diesel engine vehicles use a final drive ratio of 3.07:1, for vehicles with manual transmission, and 3.54:1 for vehicles with automatic transmission. Changing the number of teeth between the crown-wheel drive gear and pinion gear changes the ratio.

The differential comprises a pinion shaft and hypoid bevel gear, a crown wheel drive gear with an integral cage, which houses two planet gears. Two sun wheels are also located in the cage and pass the rotational drive to the drive shaft shafts.

The pinion shaft is mounted on two opposed taper roller bearings with a collapsable spacer located between them. The spacer is used to hold the bearings in alignment and also collapses under the pressure applied to the pinion nut. This allows the nut to be tightened to a predetermined torque, which collapses the spacer, setting the correct bearing preload.

The pinion shaft has an externally splined outer end which accepts and locates the input flange, which is retained by the pinion nut. The opposite end of the output flange has an internal spline which provides positive location for the front propeller shaft. The flange has an external O-ring seal which seals against the front propeller shaft shroud preventing the ingress of dirt and moisture into the splines. An oil seal is pressed into the LH casing and seals the input flange to the differential unit. The pinion shaft has a hypoid bevel gear at its inner end which mates with the crown wheel drive gear.

The crown wheel drive gear is located on the carrier and secured with ten screws. The carrier is mounted on taper roller bearings located in each casing half. The bearings are press fitted into the casing and a spacer is located on the outside face to set backlash and apply preload to the bearing.

The carrier is fitted with a shaft onto which the two planet gears are mounted. The shaft is secured in the carrier with a roll pin. The sun wheels are located in pockets within the carrier and mesh with the planet gears. Thrust washers are located between the carrier and the sun wheels and hold the sun wheels in mesh with the planet gears. Each sun wheel has a machined, splined, bore to accept the drive shaft. A groove is machined in the bore to locate the snap ring fitted to the drive shaft, providing positive drive shaft location.

Differential Operation

The operating principles of the front and rear differentials are the same. Rotational input from the propeller shaft is passed via the input flange to the pinion shaft and pinion gear. The angles of the pinion gear to the crown wheel drive gear moves the rotational direction through 90°.

The transferred rotational motion is now passed to the crown wheel drive gear, which in turn rotates the carrier. The shaft,

which is secured to the carrier, also rotates at the same speed as the carrier. The planet gears, which are mounted on the shaft, also rotate with the carrier. In turn, the planet gears transfer their rotational motion to the left and right hand sun wheels, rotating the drive shafts.

When the vehicle is moving in a forward direction, the torque applied through the differential to each sun wheel is equal. In this condition both drive shafts rotate at the same speed. The planet gears do not rotate and effectively lock the sun wheels to the carrier.

If the vehicle is turning, the outer wheel will be forced to rotate faster than the inner wheel by having a greater distance to travel. The differential senses the torque difference between the sun wheels. The planet gears rotate on their axes to allow the outer wheel to rotate faster than the inner one.

SERVICE

The oil used in the front differential is Castrol SAF-XO. The oil contains unique additives, which enhance the differentials operation. No other oil must be used in the front differential.

Front Differential Serviceable Components

- Halfshaft seals
- Needle roller bearing assemblies
- Chassis bush/fixings
- Lubricant.

mcx30.com

Published: 11-May-2011

Front Drive Axle / Differential - Differential Draining and Filling

General Procedures

CAUTION: Do not fill the differential with lubricant up to the filler plug. The filler plug is only used to fill the differential with lubricant, not to act as a level indicator.

• NOTE: The only way to check the fluid level in the differential is to drain all the fluid out and refill with the correct quantity, shown in the specification section.
For additional information, refer to: Specifications (205-03 Front Drive Axle/Differential, Specifications).

1. WARNING: Do not work on or under a vehicle supported only by a jack. Always support the vehicle on safety stands.

Raise and support the vehicle.

2. Remove the engine undershield.
For additional information, refer to: Engine Undershield (501-02 Front End Body Panels, Removal and Installation).

3. Remove the differential case lubricant filler plug.

- Clean the area around the lubricant filler plug.
- Position container to collect fluid loss.

4. Drain the differential lubricant.

- Clean the area around the drain plug.
- Remove the fluid drain plug.

5. CAUTION: There have been 2 different types of fixings used for the drain plug. Note the type and differential serial number, and make sure the correct torque is applied, see below.

Install the lubricant drain plug.

- Clean the drain plug.
- Up to differential serial number 254845: Tighten the hexagonal drive drain plug to 54 Nm (40 lb.ft).
- From differential serial number 254846: Tighten the 3/8" square drive drain plug to 28 Nm (21 lb.ft).

6. CAUTION: Do not fill the differential with lubricant up to the filler plug. The filler plug is only used to fill the differential with lubricant, not to act as a level indicator.

Fill the differential with the correct amount of lubricant.
For additional information, refer to: Specifications (205-03 Front Drive Axle/Differential, Specifications).

7. Install the differential filler plug.
   - Tighten the filler plug to 34 Nm (25 lb.ft).
8. Install the engine undershield.
   For additional information, refer to: Engine Undershield (501-02 Front End Body Panels, Removal and Installation).

mcx30.com

Published: 11-May-2011

Front Drive Axle / Differential - Drive Pinion Seal

In-vehicle Repair

Special Tool(s)	
205-053 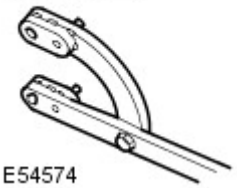 E54574	Flange holding tool 205-053
205-824 E54587	Remover drive flange 205-824
205-820 E54703	Installer - drive pinion oil seal 205-820
100-012 E54135	Impulse extractor 100-012(LRT-99-004)

Removal

CAUTION: The drive pinion seal must only be renewed once.

1. WARNING: Do not work on or under a vehicle supported only by a jack. Always support the vehicle on safety stands.

   Raise and support the vehicle.

2. Drain the differential lubricant.
   For additional information, refer to: Differential Draining and Filling (205-03 Front Drive Axle/Differential, General Procedures).

3. Remove the front driveshaft.
   For additional information, refer to: Front Driveshaft - V8 5.0L Petrol (205-01 Driveshaft, Removal and Installation) / Front Driveshaft - V6 4.0L Petrol (205-01 Driveshaft, Removal and Installation) / Front Driveshaft - TDV6 3.0L Diesel (205-01 Driveshaft, Removal and Installation) / Front Driveshaft - TDV6 2.7L Diesel (205-01 Driveshaft, Removal and Installation).

mcx30.com

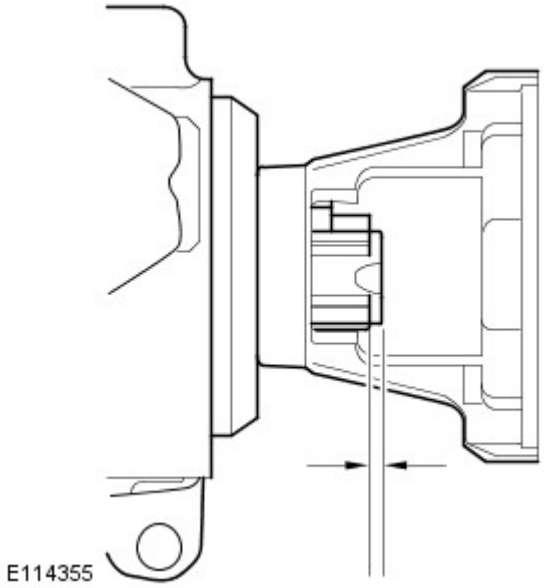

4. Measure the depth of the pinion nut on the pinion shaft.

- Note measurement for installation.

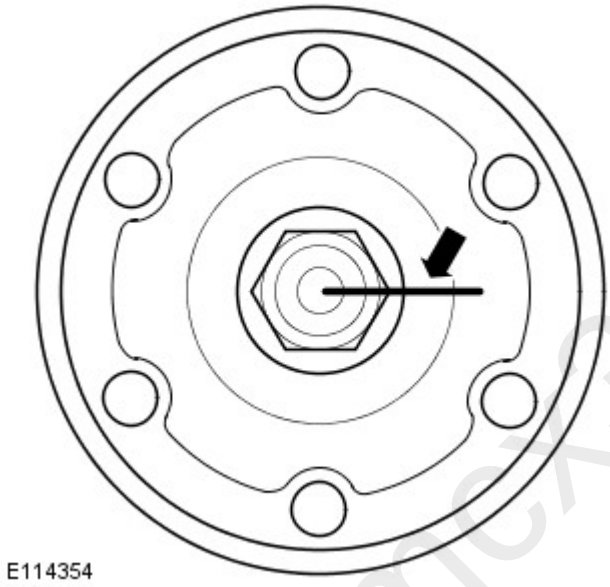

5. CAUTION: This step must be carried out to make sure that the drive pinion nut is correctly tightend on assembly.

Accurately scribe a line to mark the drive pinion shaft to the drive pinion nut and pinion flange.

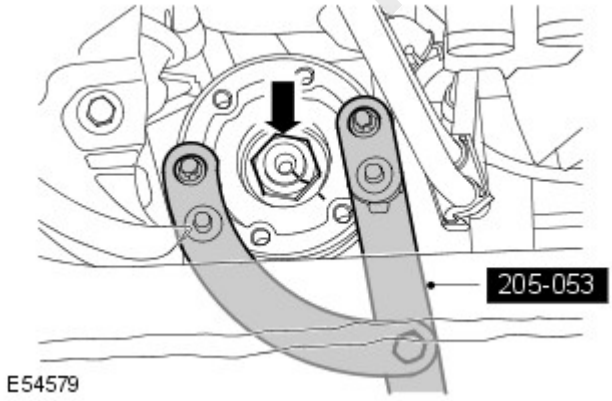

6. Remove the drive pinion flange retaining nut.

- Using the special tool, counter hold the drive pinion flange.
- Discard the drive pinion nut retainer.

mcx30.com

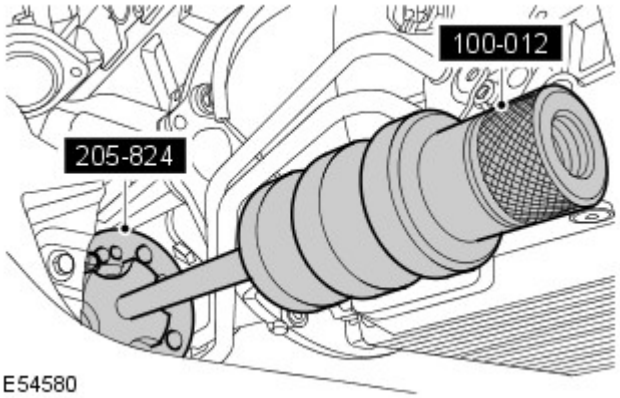

7. CAUTION: Make sure only a bolt is used with the special tool, to draw the drive pinion flange off the drive pinion shaft.

Using the special tool, remove the drive pinion flange.

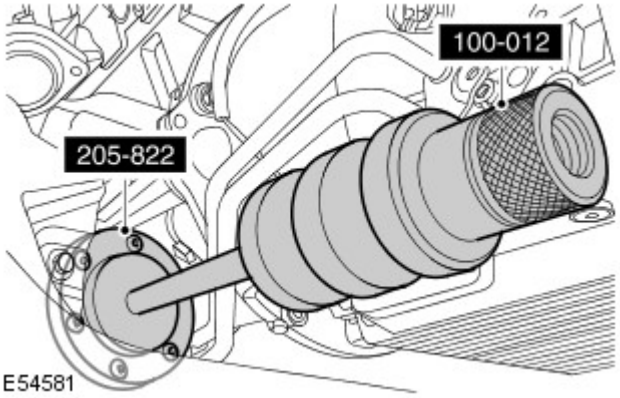

8. Using the special tool, remove the drive pinion seal.

Installation

1. Clean the drive pinion flange.

2. Clean the drive pinion seal mating faces.

3. Using the special tool, install the new drive pinion seal.

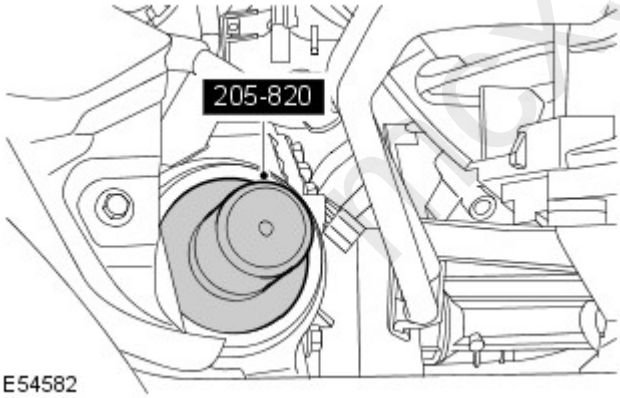

4. CAUTION: Make sure the drive pinion flange scribed marks are aligned.

Install the drive pinion flange.

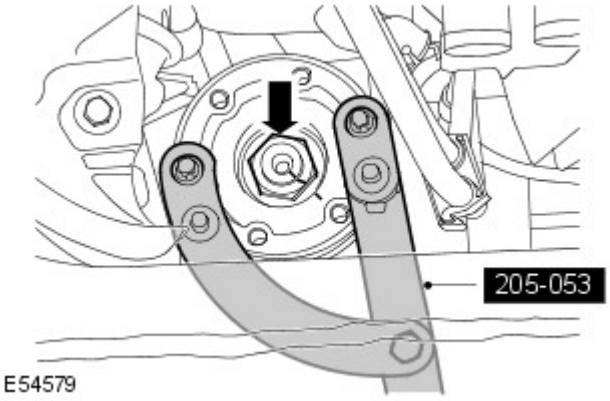

5. CAUTIONS:

Make sure the mark on the drive pinion nut is never tightened short of the scribed mark on the drive pinion shaft.

Make sure the drive pinion flange has no end float and is free to rotate.

Make sure the scribed mark on the drive pinion nut is no more than a maximum of 5 degrees past the scribed mark on the drive pinion shaft.

Install the drive pinion flange retaining nut.

- Using the special tool, counter hold the drive pinion flange.
- Install nut to previously noted number of turns.
- Measure the depth of the pinion nut on the pinion shaft.

6. Install the front driveshaft.
For additional information, refer to: Front Driveshaft - V8 5.0L Petrol (205-01 Driveshaft, Removal and Installation) / Front Driveshaft - V6 4.0L Petrol (205-01 Driveshaft, Removal and Installation) / Front Driveshaft - TDV6 3.0L Diesel (205-01 Driveshaft, Removal and Installation) / Front Driveshaft - TDV6 2.7L Diesel (205-01 Driveshaft, Removal and Installation).

7. CAUTION: Make sure the correct specification and quanity of oil is used.

Fill the differential with the correct amount of lubricant.
For additional information, refer to: Differential Draining and Filling (205-03 Front Drive Axle/Differential, General Procedures).

mcx30.com

Published: 11-May-2011

Front Drive Axle / Differential - Axle Tube

In-vehicle Repair

Removal

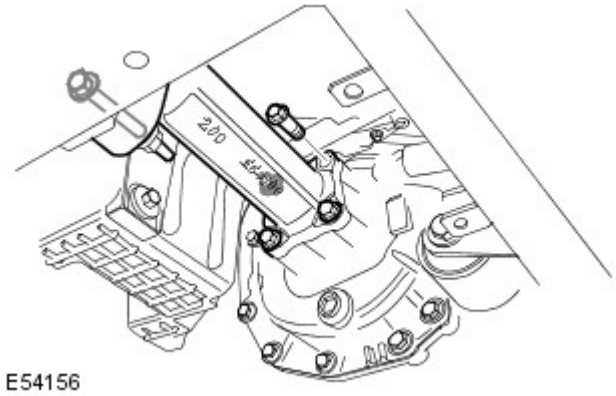

1. Remove the RH halfshaft.
   For additional information, refer to: Front Halfshaft RH (205-04 Front Drive Halfshafts, Removal and Installation).
2. Remove the axle tube.
   - Remove the bolt from the bushing.
   - Remove the 4 bolts.
   - Rotate and remove the axle tube.
   - Early models: Remove and discard the O-ring seal.
   - Later models: Remove the sealant.

Installation

1. Install the axle tube.
   - Clean the component mating faces.
   - Early models: Install a new O-ring seal.
   - Later models: Apply sealant to the mating face.
     For additional information, refer to: Specifications (205-03 Front Drive Axle/Differential, Specifications).
   - Tighten the 4 axle tube bolts to 50 Nm (37 lb.ft).
   - Tighten the axle tube bushing bolt to 63 Nm (46 lb.ft).
2. Install the RH halfshaft.
   For additional information, refer to: Front Halfshaft RH (205-04 Front Drive Halfshafts, Removal and Installation).

mcx30.com

Published: 11-May-2011

Front Drive Axle / Differential - Axle Assembly

Removal and Installation

Special Tool(s)	
205-754A 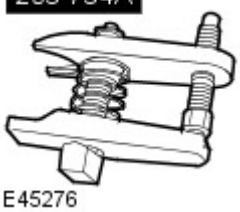 E45276	Ball joint separator 205-754(LRT-54-027)
204-703 E99557	Front Stabilizer Bar Bushing Tightening Tool 204-703
204-705 E99558	Front Stabilizer Bar Bushing Tightening Tool 204-705

Removal

- NOTE: Some variation in the illustrations may occur, but the essential information is always correct.

All vehicles

1. WARNING: Make sure to support the vehicle with axle stands.

Raise and support the vehicle.

2. Remove the front wheels and tires.

3. Remove the axle tube.
For additional information, refer to: Axle Tube (205-03 Front Drive Axle/Differential, In-vehicle Repair).

4. Remove the LH splash shield.

- Remove the 4 clips.

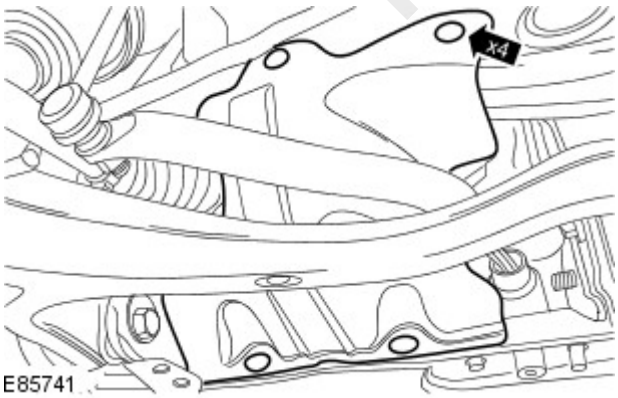

E85741

mcx30.com

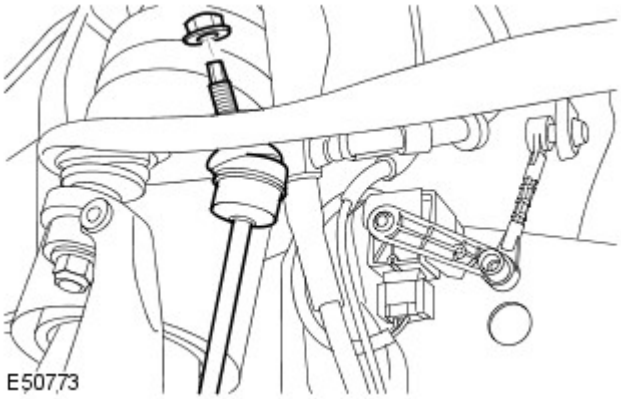

5. Release the LH stabilizer bar link.

- Remove and discard the nut.

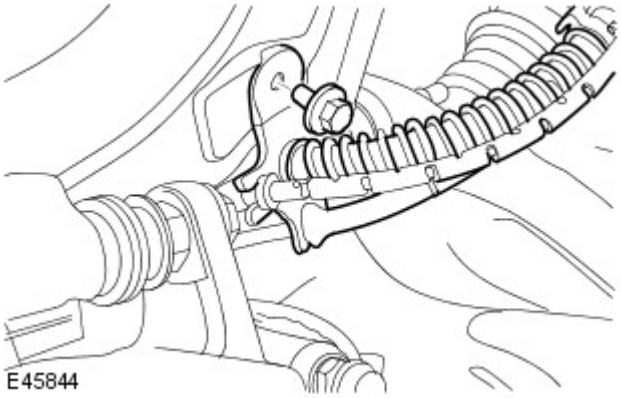

6. Release the LH brake hose bracket from the wheel knuckle.

- Remove the bolt.

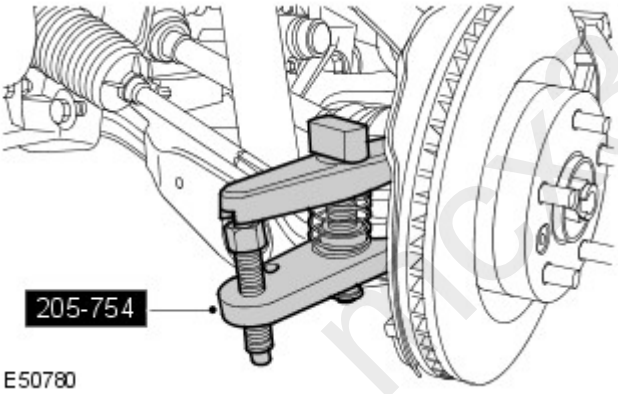

7. CAUTION: Make sure the ball joint seal is not damaged. A damaged seal will lead to the premature failure of the joint.

Using the special tool, release the LH tie-rod end ball joint from the wheel knuckle.

- Remove and discard the nut.

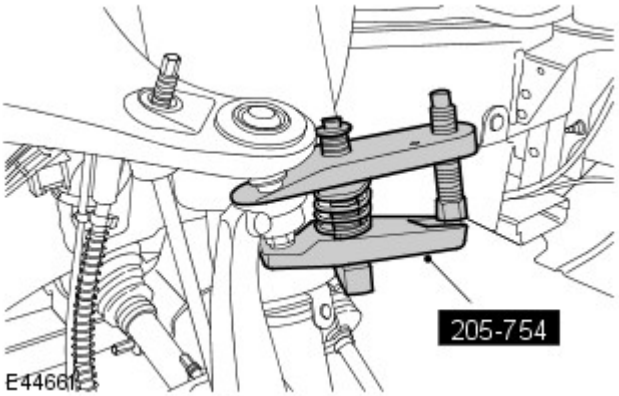

8. CAUTIONS:

Make sure the ball joint seal is not damaged. A damaged seal will lead to the premature failure of the joint.

The lower arm ball joint can be damaged by excessive articulation. The wheel knuckle must be fully supported at all times. Do not allow the wheel knuckle to hang on the lower arm. Failure to follow this instruction will result in damage to vehicle.

Using the special tool, release the LH upper arm ball joint.

- Remove and discard the nut.

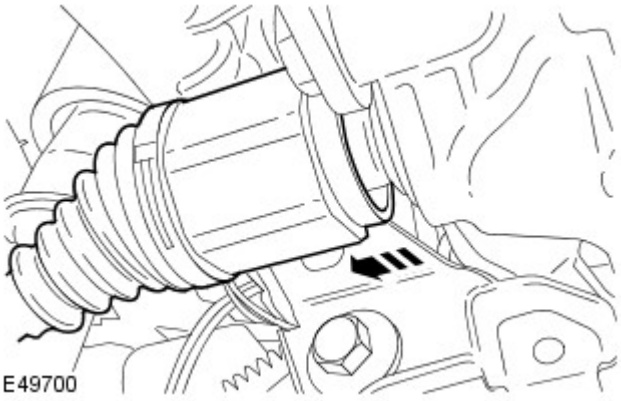

9. Release the LH halfshaft from the axle assembly.

- Remove and discard the snap ring.
- Using a suitable tie strap, support the LH halfshaft.

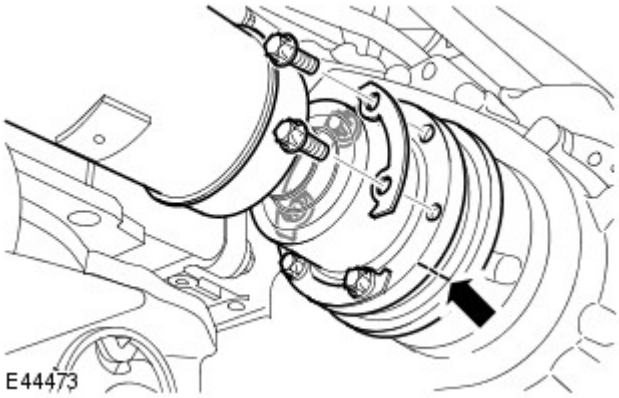

10. CAUTIONS:

Mark the position of the driveshaft flange in relation to the drive pinion flange.

To avoid damage to the joint or gaiter, do not allow the driveshaft to hang.

Release the driveshaft from the front axle drive flange.

- Remove the 6 Torx bolts and washers, discard the bolts.
- Using a suitable tie strap, secure the driveshaft end plate.

Vehicles with Active Stabilization

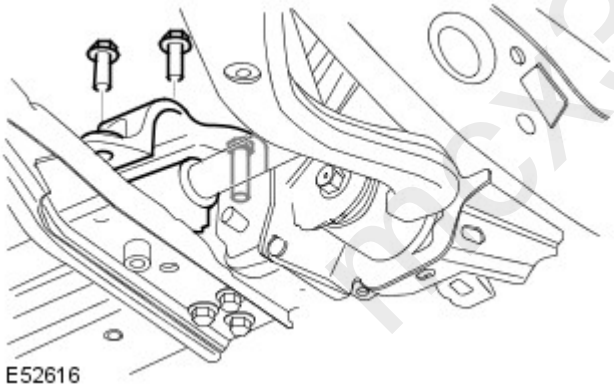

11. Remove the stabilizer bar bushing.

- Remove the 3 bolts.
- Remove the clamp.
- Remove the stabilizer bar bushing.

Vehicles with diesel engine

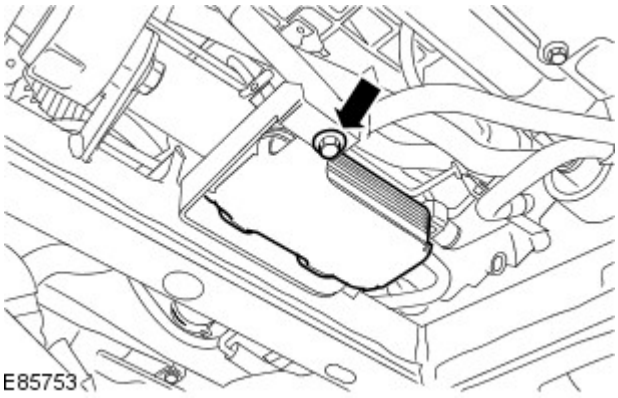

12. Release the fuel cooler.

- Remove the bolt.

Vehicles with 5.0L engine

13. Release the automatic transmission fluid cooler.

- Remove the 4 bolts.

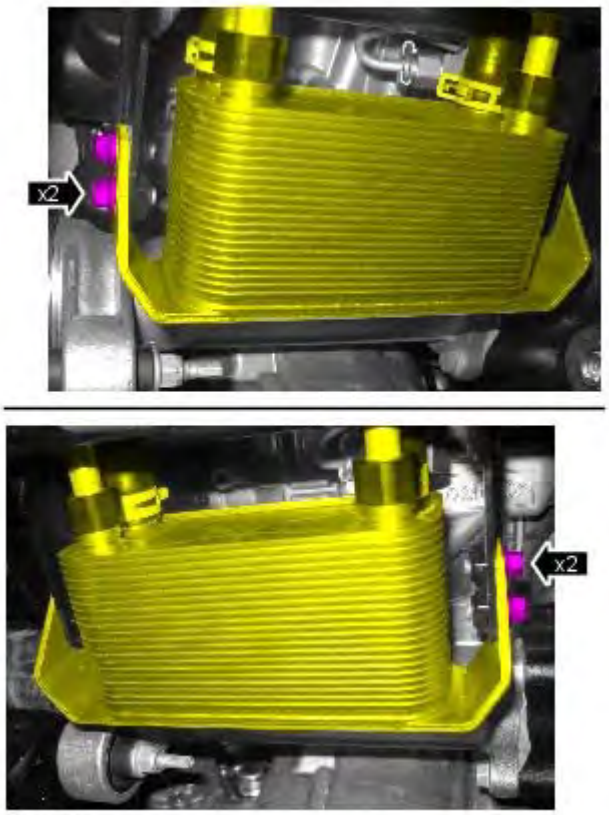

E123471

14. Remove the transmission fluid cooler mounting bracket.

- Release the transmission fluid cooler pipe bracket.
- Remove the nut.
- Remove the 3 bolts.

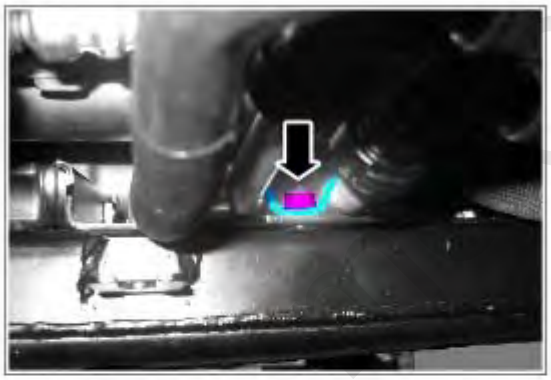

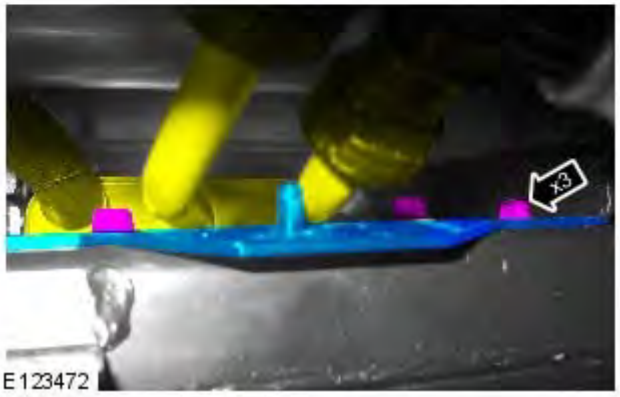

E123472

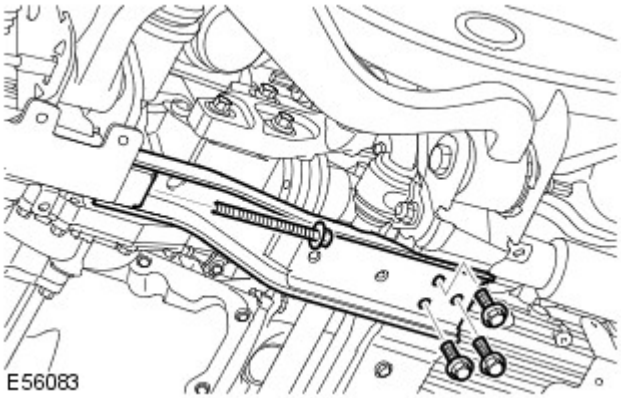

15. Remove the front axle crossmember.

- Remove the 4 bolts.

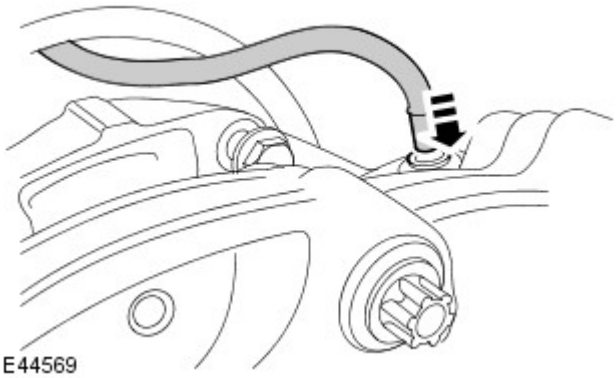

16. CAUTION: Before the disconnection or removal of any components, make sure the area around joint faces and connections are clean. Plug any open connections to prevent contamination.

Disconnect the breather line.

- Release the clip.

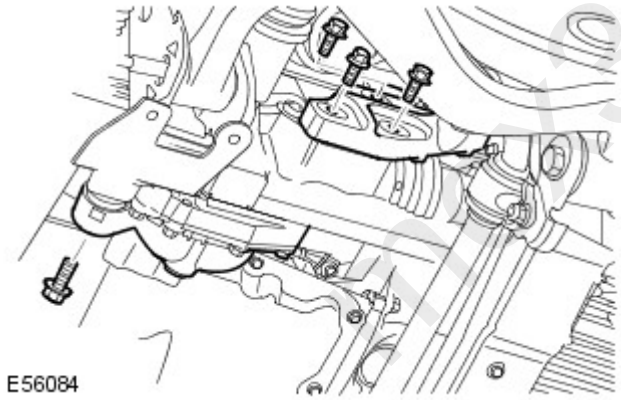

17. Using a transmission jack, support the front axle assembly.

18. With assistance, remove the front axle assembly.

- Remove and discard the 3 axle assembly rear mounting bolts.
- Remove the front axle assembly front mounting bolt.

Installation

All vehicles

1. With assistance, install the front axle assembly.

- With assistance, raise and manoeuvre the front final drive unit.
- Tighten the 3 new bolts in the front axle assembly to 80 Nm (59 lb.ft), then a further 60 degrees.
- Tighten the front axle assembly front mounting bolt to 105 Nm (77 lb.ft).

2. Connect the breather line.

3. Install the front axle crossmember.

- Tighten the 4 bolts to 115 Nm (85 lb.ft).

Vehicles with 5.0L engine

4. Install the transmission fluid cooler mounting bracket.
   - Tighten the 3 bolts to 25 Nm (18 lb.ft.).
   - Secure the transmission fluid cooler coolant pipe to the coolant hose bracket.
   - Tighten the nut to 15 Nm (11 lb.ft).
5. Install the automatic transmission fluid cooler.
   - Tighten the 4 bolts to 25 Nm (18 lb.ft.).

Vehicles with diesel engine

6. Secure the fuel cooler.
   - Tighten the bolt to 23 Nm (17 lb.ft).

Vehicles with Active Stabilization

7. Install the stabilizer bar bushing.
   - Install the clamp.
   - Install the bolts.
   - Tighten the bolts to 115 Nm (85 lb.ft).

All vehicles

8. NOTE: Make sure that new bolts are installed.

   Secure the driveshaft to the front axle drive flange.
   - Stage 1: Tighten the bolts to 45 Nm (33 lb.ft).
   - Stage 2: Tighten the bolts a further 90 degrees.
   - Remove and discard the tie strap.
9. Install a new snap ring to the LH halfshaft.
   - Remove and discard the tie strap.
10. NOTE: Do not fully engage the halfshaft until the oil seal protector has been removed.

    Secure the LH halfshaft in the axle assembly.
    1. Open the halfshaft seal protector and install the halfshaft.
    2. Release the halfshaft seal protector from the halfshaft seal.
    3. Remove the halfshaft seal protector.
    4. Fully install the halfshaft.

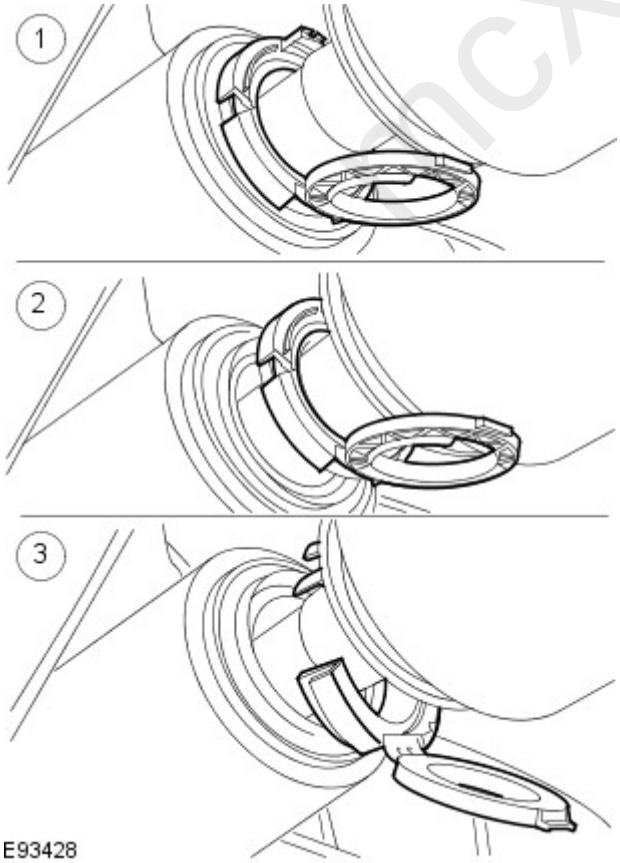

hcx30.com

11. WARNING: Make sure that a new nut is installed.

Secure the LH upper arm to the wheel knuckle.

- Install a new nut and tighten to 70 Nm (52 lb.ft).

12. WARNING: Make sure that a new nut is installed.

Secure the LH tie-rod end ball joint to the wheel knuckle.

- Install a new nut and tighten to 70 Nm (52 lb.ft).

13. Secure the LH brake hose bracket to the wheel knuckle.

- Tighten the bolt to 22 Nm (16 lb.ft).

14. Secure the LH stabilizer bar link.

- Install a new nut and tighten to 115 Nm (85 lb.ft).

15. Install the LH splash shield.

- Install the clips.

16. Install the axle tube.
For additional information, refer to: Axle Tube (205-03 Front Drive Axle/Differential, In-vehicle Repair).

17. Install the wheels and tires.

- Tighten the wheel nuts to 140 Nm (103 lb.ft).

mcx30.com

Published: 11-May-2011

Front Drive Axle / Differential - Axle Carrier Bushing

Removal and Installation

Special Tool(s)	
205-825/3 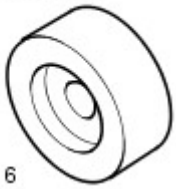 E54216	Installer rear axle front bush 205-825/3
205-825/5 E54209	Receiver cup rear differential front bush 205-825/5
502-009/2 E54205	Remover rear differential rear bush 502-009/2

Removal

CAUTION: Make sure the bush is correctly aligned.

- NOTE: Take note of the fitted position of the bush.

1. WARNING: Do not work on or under a vehicle supported only by a jack. Always support the vehicle on safety stands.

Raise and support the vehicle.

2. Remove the exhaust system.
For additional information, refer to: Exhaust System (309-00D Exhaust System - V8 5.0L Petrol, Removal and Installation).
For additional information, refer to:

Exhaust System (309-00C Exhaust System - V6 4.0L Petrol, Removal and Installation),
Exhaust System (309-00B Exhaust System - TDV6 3.0L Diesel, Removal and Installation),
Exhaust System - Vehicles With: Diesel Particulate Filter (DPF) (309-00A Exhaust System - TDV6 2.7L Diesel, Removal and Installation),
Exhaust System - Vehicles Without: Diesel Particulate Filter (DPF) (309-00A Exhaust System - TDV6 2.7L Diesel, Removal and Installation).

3. Using a jack, support the axle assembly.

mcx30.com

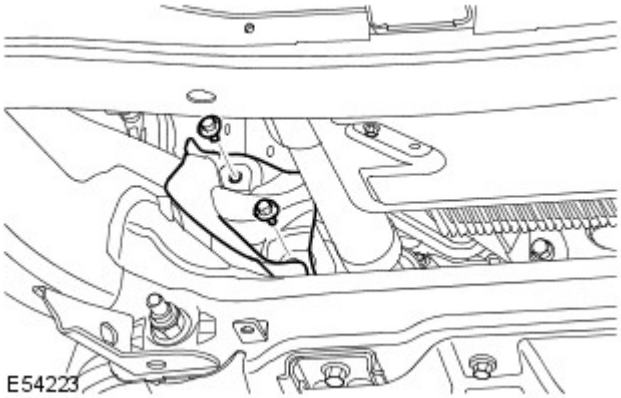

4. Remove the axle carrier bushing heat shield.

- Remove the two retaining bolts.

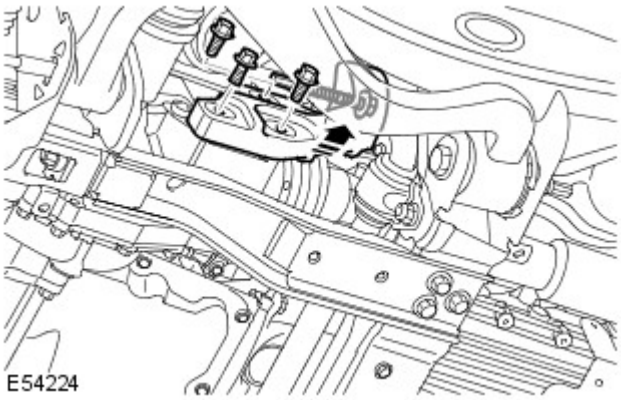

5. CAUTION: The bolts must only be used once.

Remove the axle carrier.

- Remove and discard the three bolts retaining the axle carrier to the axle.
- Remove the axle carrier bushing bolt.

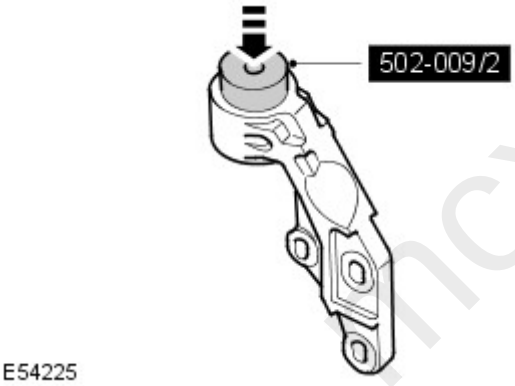

6. NOTE: Take note of the fitted position of the bush.

Using the special tools, remove the axle carrier bushing.

Installation

mcx30.com

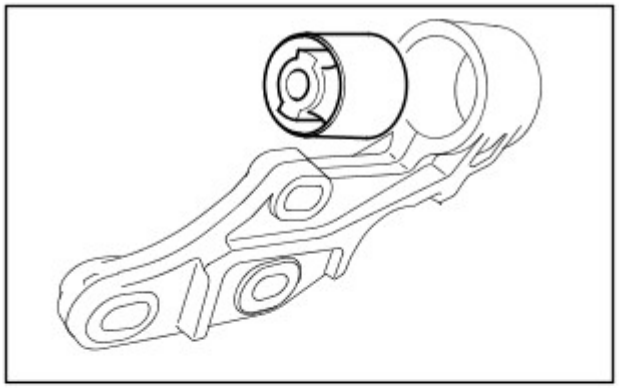

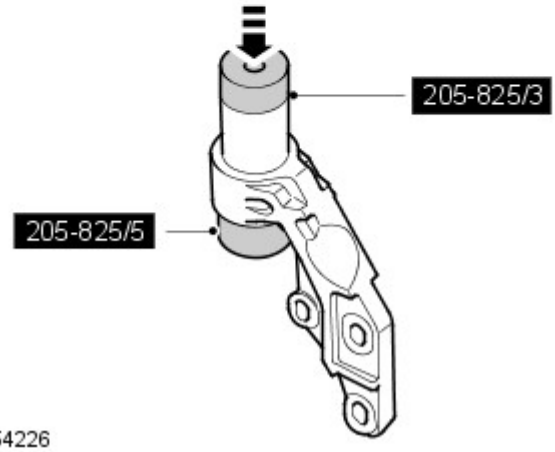

1. CAUTION: Make sure the bush is correctly aligned.

   Using the special tools, install the axle carrier bushing.

2. Install the axle carrier.
   - Tighten the M14 bolt to 105 Nm (77 lb.ft).
   - Tighten the new axle carrier bracket bolts to 80 Nm (59 lb.ft), then a further 60 degrees.
3. Install the axle carrier bushing heat shield.
4. Remove the axle support.
5. Install the exhaust system.
   For additional information, refer to: Exhaust System (309-00D Exhaust System - V8 5.0L Petrol, Removal and Installation).
   For additional information, refer to:

   Exhaust System (309-00C Exhaust System - V6 4.0L Petrol, Removal and Installation),
   Exhaust System (309-00B Exhaust System - TDV6 3.0L Diesel, Removal and Installation),
   Exhaust System - Vehicles With: Diesel Particulate Filter (DPF) (309-00A Exhaust System - TDV6 2.7L Diesel, Removal and Installation),
   Exhaust System - Vehicles Without: Diesel Particulate Filter (DPF) (309-00A Exhaust System - TDV6 2.7L Diesel, Removal and Installation).

mcx30.com

Published: 11-May-2011

Front Drive Axle / Differential - Axle Tube Bushing

Removal and Installation

Special Tool(s)	
	Remover/installer - Front axle extension support bush 308-625/1
	Remover/installer - Front axle extension support bush 308-625/2
	Remover/installer - Front axle extension support bush 308-625/3

Removal

1. Disconnect the battery ground cable.
   For additional information, refer to: Specifications (414-00 Battery and Charging System - General Information, Specifications).
2. Raise and support the vehicle.
3. Remove the axle tube.
   For additional information, refer to: Axle Tube (205-03 Front Drive Axle/Differential, In-vehicle Repair).

mcx30.com

4. NOTE: Note the fitted position.

Using the special tools, remove the bushing.

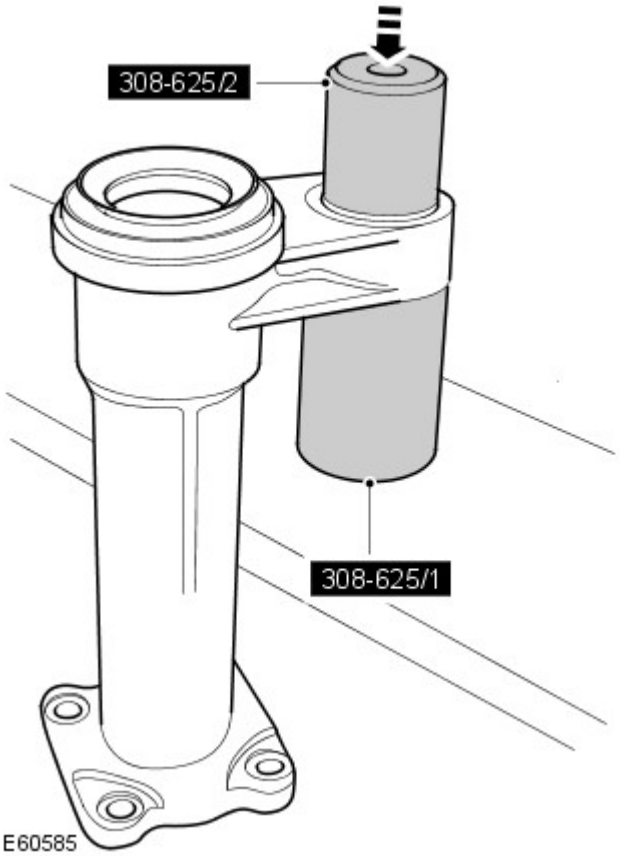

Installation

1. NOTE: Note the fitted position.

Using the special tools, install the bushing.

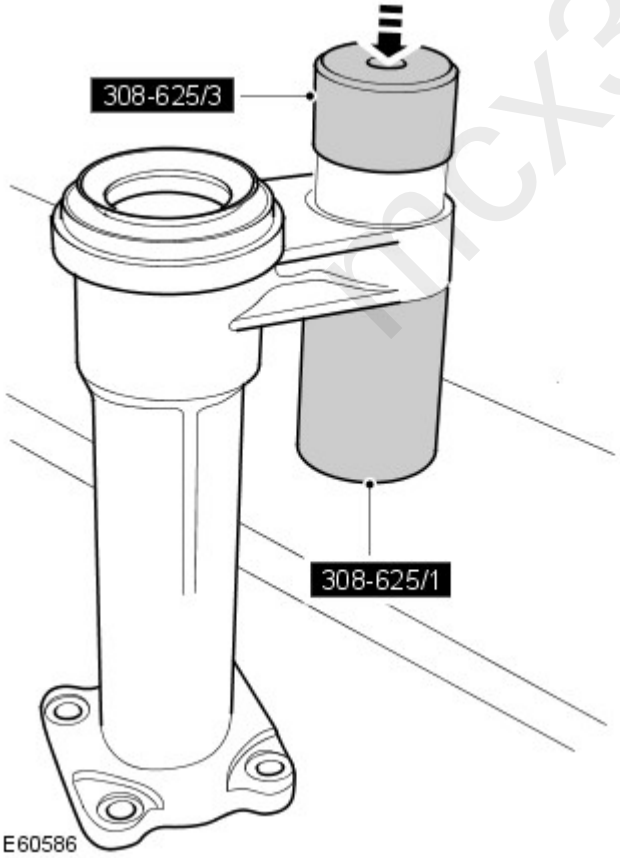

2. Install the axle tube.
For additional information, refer to: Axle Tube (205-03 Front Drive Axle/Differential, In-vehicle Repair).

mcx30.com

3. Connect the battery ground cable.
   For additional information, refer to: Specifications (414-00 Battery and Charging System - General Information, Specifications).

mcx30.com

Published: 11-May-2011

Front Drive Axle / Differential - Axle Cover Bushing

Removal and Installation

Special Tool(s)	
502-009/6 E55285	Bearing Housing 502-009/6
51204 E55278	Bearing set for 14mm bolt 51204
205-825/3 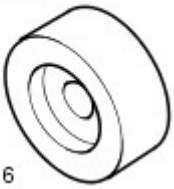 E54216	Installer rear axle front bush 205-825/3
502-009/2 E54205	Remover rear differential rear bush 502-009/2
502-009/5 E54148	Remover/Installer long 14mm bolt 502-009/5
502-009/4 E55284	Nut for long 14mm bolt 502-009/4
205-825/1 E54219	Receiver cup front axle front bush 205-825/1

mcx30.com

Removal

CAUTION: Make sure the bush is correctly aligned.

- NOTE: Take note of the fitted position of the bush.

1. WARNING: Do not work on or under a vehicle supported only by a jack. Always support the vehicle on safety stands.

   Raise and support the vehicle.
2. Remove the front wheels and tires.
3. Remove the front differential.
   For additional information, refer to: Axle Assembly (205-03 Front Drive Axle/Differential, Removal and Installation).
4. NOTE: Take note of the fitted position of the bush.

   Using the special tools, remove the front axle housing support insulator.

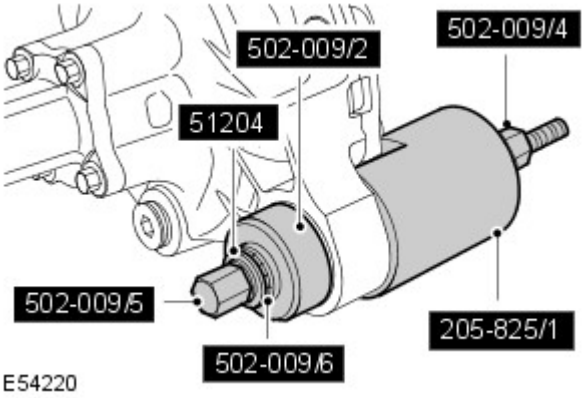

Installation

1. CAUTION: Make sure the bush is correctly aligned.

   Using the special tools, install the front axle housing support insulator.

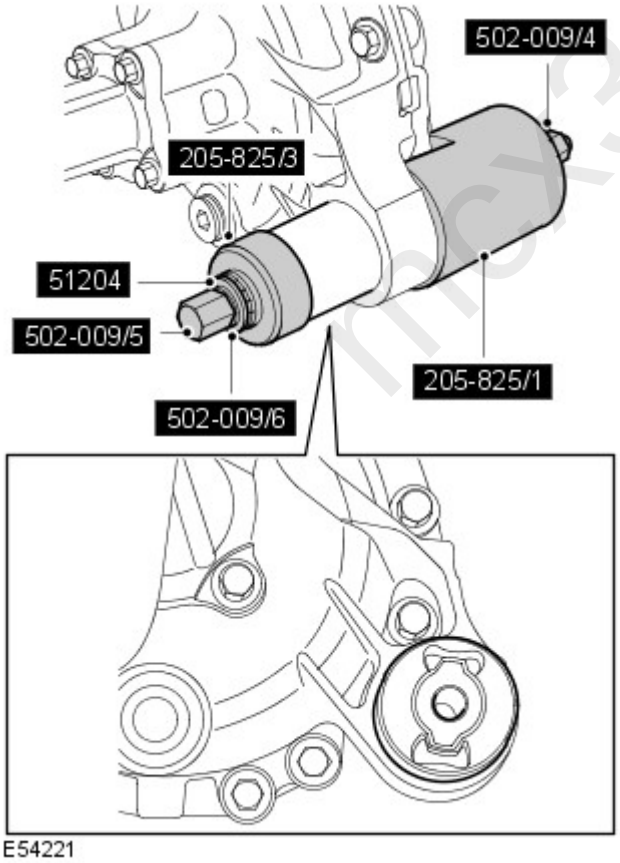

2. Install the front differential.
   For additional information, refer to: Axle Assembly (205-03 Front Drive Axle/Differential, Removal and Installation).
3. Install the front wheels and tires.

mcx30.com

- Tighten the wheel nuts to 140 Nm (103 lb.ft).

mcx30.com